正面

MOES
HOME, SMART MOES HOME

works with Tuya

Instruction Manual
Matter Series Thermostat

matter

For Water Heating/Boiler/Electric Heating

English

WORKS WITH alexa

WORKS WITH Google Assistant

MWHT–S02–GA–WH–MS–EM03

Mehr Inhalt
Scannen Sie den QR–Code, um das elektronische Handbuch in der entsprechenden Sprache für weitere Inhalte zu erhalten.

Más contenido
Escanee el código QR para obtener el manual electrónico en el idioma correspondiente para más contenido.

Altri contenuti
Scansiona il codice QR per ottenere il manuale elettronico nella lingua corrispondente per ottenere ulteriori contenuti.

Plus de contenu
Plus de contenuScannez le code QR pour obtenir le manuel électronique dans la langue correspondante pour obtenir plus de contenu.

Mais conteúdo
Escaneie o código QR para obter o manual eletrônico no idioma correspondente para obter mais conteúdo.

Więcej treści
Skanuj kod QR, aby uzyskać elektroniczną instrukcję w odpowiednim języku, aby uzyskać dodatkowe treści.

Больше контента
Сканируйте QR–код для получения электронного руководства на соответствующ ем языке для получения дополнительного контента.

Welcome
Please confirm that this product is suitable for your heating equipment before installation;
*Before installation or maintenance, please make sure to keep the power off;
*Please strictly follow the wiring diagram for wiring installation;
*Installation to the wall, please confirm that the fasteners are suitable for
this product;
*Do not pull the cable too hard, otherwise the product will be damaged;
*If a hard plastic wire is used in the installation process, it must be bent to
an appropriate angle in advance;
*Please arrange for professionals to install;
*Please contact the after–sales service for equipment failure, please do

not try to repair it yourself;
* After installation, please refer to this manual to check again to ensure normal and safe use, and keep this manual properly.

In the box you will find
Thermostat 1pc Screws 2pc User Guide 1pc
QC Passed 1pc Floor Sensor 1pc (Floor Sensor is Optional)

ABOUT YOUR THERMOSTATS
The Matter range has been developed to control electric underfloor ,water heating or water/gas boiler system. These units are designed for use in commercial, industrial, civil and domestic properties.

FEATURES
On Appearance
1. LED display, more friendly interface;. LED matrix light, simple display, energy saving, protect your eyes.
2. Touch buttons to make simple operation.
3. The ultra–thin embedded panel perfectly fits all kinds of walls; The visiable thickenss above the wall is only 12.4mm.
4. Frameless acrylic panel design, simple and elegant;
5. Classic black/white color scheme, seamlessly integrated.
6. Compatible with standard 86mm square cassettes and 60mm European cassettes to meet all installation environments;
7. Interlock to connect gives you easy installation.

On Functionality
1. Strict temperature control accuracy (± 1˚C) to provide the warmth you

want;
2. Power off protection, save all your settings safely;
3. Preset adjustment of 7days mode in a week, programmable setting of 6 time periods a day, green energy saving, Less cost, more intelligent and environmental protection;
4. Support the creation of product local groups/shares to achieve unlimited centralized control of the number of products/ multi–terminal control;
5. Perfect access: ALEXA/GOOGLE HOME /HOMEKIT /APPLE HOME, full experience new voice control method;

TECHNICAL DATA
Power Supply:95 ~240 VAC, 50/60Hz or 24V DC/AC,50/60Hz
Please check the information laser printed on the back of the thermostat for the actual voltage.

Model：WHT–S02
Current Load: 5A (water heating, waterlgas boiler),
16A (electric heating)
Sensor: NTC3950, 10K
Accuracy: ±1˚C
Set Temp. Range: 5–35˚C
Room Temp. Range: 5–70˚C
Display Temp. Range: 5 ~ 70˚C
Ambient Temp.: 0~ 45˚C
Ambient Humidity: 5 ~ 95 % RH (Non Condensing)

Storage Temp.: –5~ 45˚C
Power Consumption: <1. 5W
Timing Error: < 1%
Shell Material: PC +ABS（Fireproof)
Installation Box: 86 * 86mm Square or European 60mm Round Box
Wire Terminals: Wire 2 x 1.5 mm2 or 1 x 2.5 mm2
Protection Class: IP20
Max.Transmit Power: +16dBm

DIMENSION (Unit:mm)

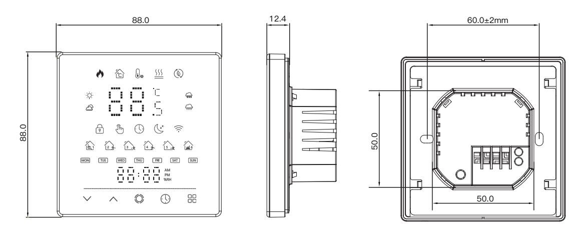

HOME SCREEN QUICK REFERENCE

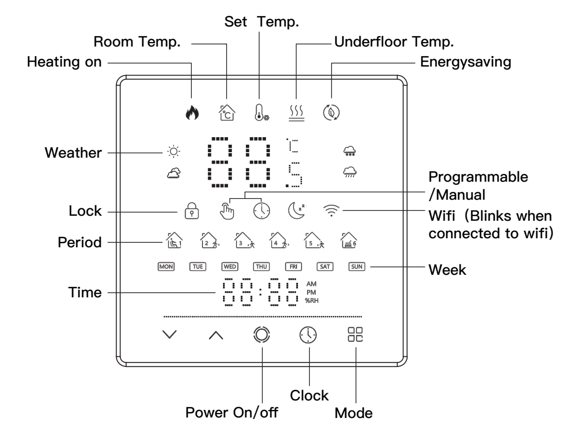

BEFORE WIRING AND INSTALL
1. Read these instructions carefully. Failure to follow them could damage the product or cause a hazardous condition.
2. Check the rathings given in the instructions and on the product to make sure the product is suitable for your application.
3. Installer must be a trained, experienced service technician.
4. After installation is complete, check out product operation as provided in these instructions.

CAUTION
Electrical Shock or Equipment Damage Hazard.
Can shockindividuals or short equipment circuitry.
Disconnect power supply before installation.

WIRING
Note:
GA is for water heating; GB is for electric heating; GC is for water/gas boiler;If your boiler has more than three wires, please feel free to contact us and we will answer the correct installation method for you.NTC and Modbus is optional.

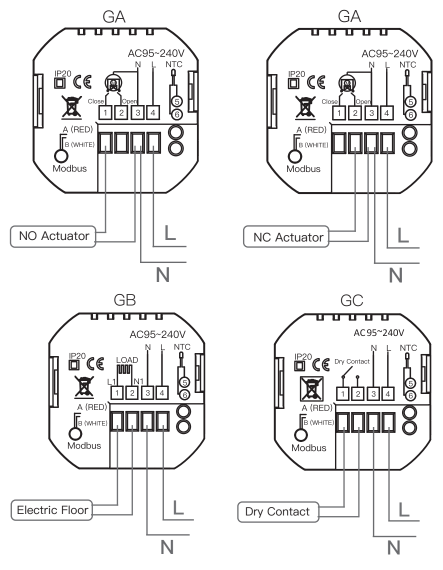

INSTALLATION
Your thermostat is suitable for installation within a standard 86mm pattress box or European 60mm pattress box.

1. Accurately connect the power cable to the power terminal box.

2. Fix the mounting plate on the cassette with a screwdriver through two screws.

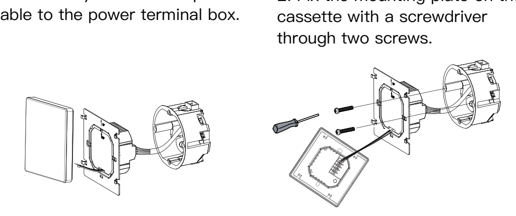

4. Installation completed

3. Hang the control panel onto the mounting plate

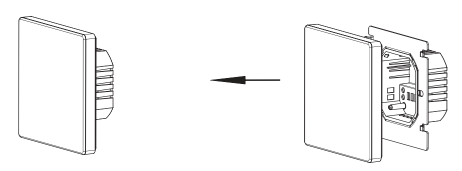

OPERATION
During Power On
1. Power On/off: Press the ⏻ to turn the thermostat on/off.

2. Manual & Programmable
Touch ⊞ to change between manual mode ☝ and programme mode ◷ .
In manual mode, ☝ will show on the display,
In programmable mode, ◷ will show on the display.

3. Setting Temperature
In the programming mode, the temperature setting and time setting will be locked. If the user wants to adjust, he must first adjust the thermostat to manual mode by pressing the“ ⊞ ”key.
In the manual mode, The temperature can be adjusted by pressing the “ ∨ ∧ ” keys on the device

4. Adjusting/Setting the Clock
Press“ ◷ ”to set minute, hour and weekday. and adjust the values by turning the ∨ ∧ .
Press “ ⊞ ”once more to confirm and exit.

5. Locking your Thermostat
Press and hold the“ ∨ ”and“ ∧ ”for 5 seconds to lock/unlock your thermostat.
In item 3 of high senior options, you can select full lock or half lock.

6. Adjusting/Setting the Programmable Schedules
Press icon“ ◷ ” four times in a row. You can see “MON” and“⌂”, and the minutes of time are flashing.
Set the minutes;
Press the icon “ ◷ ” again, the hour of the time will flash, set the hour by turning the ∨ ∧;
Press the icon “ ◷ ” again, the temperature setting will flash, set the temperature turning the ∨ ∧;
This completes the setting of periods1.
In the same way, complete the settings of periods2, 3, 4,5and 6.
Press the icon “ ◷ ” once more to enter the “TUE” “WED” “THU” “FRI” “SAT” “SUN” settings . Repeat the above process to set the period and temp. other schedule.
Press the icon “ ◷ ” once more to confirm and exit.

Default settings for program schedule

[illegible]	[illegible]		[illegible]		[illegible]		[illegible]		[illegible]		[illegible]		[illegible]	
	[illegible]	[illegible]	[illegible]	[illegible]	[illegible]	[illegible]	[illegible]	[illegible]	[illegible]	[illegible]	[illegible]	[illegible]	[illegible]	[illegible]
Period 1	6:00~8:00	20	6:00~8:00	20	6:00~8:00	20	6:00~8:00	20	6:00~8:00	20	6:00~8:00	20	6:00~8:00	20
Period 2	8:00~11:30	15	8:00~11:30	15	8:00~11:30	15	8:00~11:30	15	8:00~11:30	15	8:00~11:30	20	8:00~11:30	20
Period 3	11:30~13:30	15	11:30~13:30	15	11:30~13:30	15	11:30~13:00	15	11:30~13:30	15	11:30~13:30	20	11:30~13:30	20
Period 4	13:30~17:00	15	13:30~17:00	15	13:30~17:00	15	13:30~17:00	15	13:30~17:00	15	13:30~17:00	20	13:30~17:00	20
Period 5	17:00~22:00	22	17:00~22:00	22	17:00~22:00	22	17:00~22:00	22	17:00~22:00	22	17:00~22:00	20	17:00~22:00	20
Period 6	22:00~6:00	15	22:00~6:00	15	22:00~6:00	15	22:00~6:00	15	22:00~6:00	15	22:00~6:00	15	22:00~6:00	15

A separate schedule may be set for weekdays (Mon — Fri) and for weekends (Sat or Sun).

7. Checking the Temperature of Floor Sensor
Press and hold the“ ∨ ” arrow for 5 seconds to display the temp. of floor sensor. If no external sensor is connected, the thermostat will display “Er”.Note: Do not use third–party external sensors, the temperature will be incorrect.

8. Setting the Functions and Options
During power off, Press and hold “ ⊞ ”and “ ◷ ” for 2 sec. in the order to reach system function. Then press “ ⊞ ” to scroll through the available functions, And use the “∨ ∧” to change the options.
All settings are confirmed automatically.

[illegible]	[illegible]	[illegible]	[illegible]
1	Temperature compensation	-9 to 9 ℃ (for internal sensor)	–3
2	Deadzone temperature	1-5℃	01
3	Button locking	00: All buttons are locked except power button. 01: All buttons are locked.	01
4	Sensor typer	In:Internal sensor(to control the temp.) Ou:External sensor(to control the temp.) AL:Internal/Externalsensor (internal sensor to control the temp., external sensor to limit the temp.)	AL
5	Min.set temp.	5-15℃	05
6	Max.set temp.	15-45℃	35

7	Display mode	00 : Display both set temp. and room temp. 01 : Display set temp. only	00
8	Low temperature protection setting.	0-10℃	00
9	High temperature protection setting.	10-70℃	45
a	Economy mode	00: Non-energy saving mode 01: Energy saving mode	00
b	Economy temp.	0-30℃	20
c	Brightness at daytime (6:00-22:00)	0-8 — When set to 0, the device will run for 10 seconds after inactivity. The screen will go completely off with no display.	03
d	Brightness at night (22:00-6:00)	0-8	01
e	Reset	00: No factory reset; 01: Factory reset	00
f	Version number		U1

SIMPLE EXCEPTION HANDLING

No.	Phenomenons	Handling
1	Power is on but without display.	*Check if the terminals between LCD panel and Power Unit Box is loosen.
2	Without output but display works.	* Usea new LC panel or new Power Unit Box toreplace the old one.
3	Room Temp. Is a lttle different from the actual.	* Do temperature calibration in item 1 of high senior options

Preparation for use
1. Download MOES App on App store or scan the QR code

GET IT ON Google Play
Download on the App Store

MOES APP is upgraded as much more compatibility than Tuya Smart/Smart Life APP,functional well for scene controlled by Siri,widget and scene recommendations as the fully new customized service. (Note:Tuya Smart/Smart Life APP still works,but MOES APP is highly recommended)

2. Registration or Log in
Enter the Register/Login interface; tap “Register” to create an account by entering your phone number to get verification code and “Set password”. Choose “Log in”if you already have a MOES account.

Steps for connecting the APP to the device
Note: The device only supports 2.4GHz WiFi type, please turn on Bluetooth before adding.

1. Make sure your phone is connected to Wi–Fi and Bluetooth.

2. In the off state, long press the “ ∨ ” until the device WiFi indicator starts flashing and the device enters the network configuration state.

3. Select “Add Device” and scan the QR code on the device.

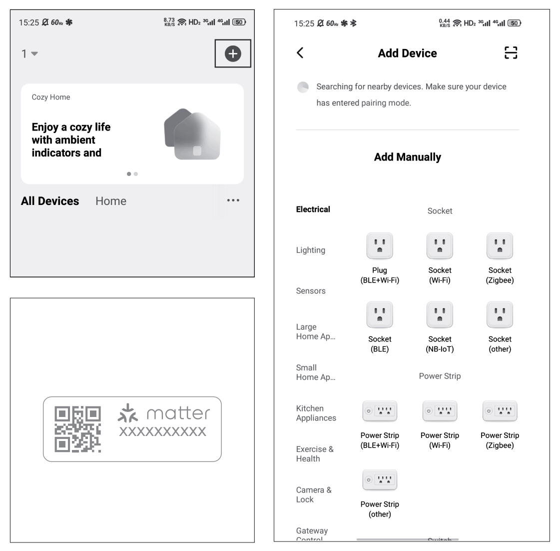

4. Wait for WiFi configuration, Add the device successfully, you can edit the name of the device to enter the device page by click “Done” .

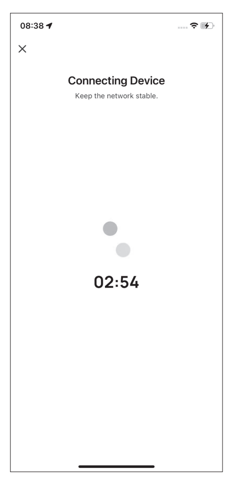

Set Up Your Device via Matter
You can scan the QR code to get the guide.This guide provides a brief introduction to the Wi–Fi device, Take Alexa, Google, and Apple ecosystems for example and the following shows you how to set up via Matter.

Apple Home
SmartThings
Google Assistant
Amazon Alexa

How to Reset/Re–pair Matter code
In the off state, long press the “ ∨ ” until the device WiFi indicator starts flashing and the device enters the network configuration state.

Troubleshooting
If you have problems installing or operating your device, please review its product data sheet:
https://www.moestech.com/blogs/news/wht–s02

Control your home with your voice
Devices are compatible with Amazon Alexa and Google Home supported functionalities. Please see our step–by–step guide on:
https://www.moestech.com/blogs/news/smart–device –linked–voice –speaker

CE Declaration of Conformity
Hereby, Wenzhou NOVA New Energy CO., LTD declares that the radio equipment type WHT–S02 is in compliance with Directive 2014/35/EU, 2014/30/EU, 2011/65/EU, 2014/53/EU, The full text of the EU declaration of conformity is available at the following internet address:
https://www.moestech.com/blogs/news/wht–s02

RECYCLING INFORMATION
All products marked with the symbol for separate collection of waste electrical and electronic equip ment (WEEE Directive 2012/19 / EU) must be disposed of separately from unsorted municipal waste. To protect your health and the environment, this equipment must be disposed of at designated collection points for electrical and electronic equipment designated by the government or local authorities. Correct disposal and recycling will help prevent potential negative consequences for the environment and humanhealth. To find out where these collection points are and how they work, contact the installer or your local authority.

WARRANTY INSTRUCTIONS
Dear Sir or Madam, thank you for purchasing the product.
We hope you'll enjoy using it.
The warranty for the products in the warranty card is hereby granted as follows.
As a condition of using the warranty, you must comply with the following terms and procedures:
1. Products are covered by a 24–month warranty, effective from the date of purchase of the covered product by a retail customer.
2. In order to exercise warranty rights, the purchaser must present: a) Warranty card, b) Proof of purchase (VAT invoice, financial receipt or other document confirming the actual date of purchase), unless the purchase date of the product comes from the warranty card.
3. If product quality problems occur within 24 months from the date of receipt, please prepare the product and packaging and go to the place or store where you purchased it to apply for after–sales maintenance. If the product is damaged due to personal reasons, a certain maintenance fee will be charged.
4. We recommend that you properly protect the goods when delivering them to the guarantor – for this purpose, we recommend that you use the original packaging with padding to ensure safe transportation. If you choose to use replacement packaging, we recommend that you ensure that the product is adequately protected from damage during shipping. We recommend that you place an appropriate sticker on your packaging indicating the product's susceptibility to impact, such as “Warning Glass”.
5. Reported defects covered by the warranty will be considered immediately and no later than 14 days from the date of delivery of the

反面

goods to the Guarantor.
6. After checking and determining the legality of the warranty claim, the Guarantor's services will repair the product within a reasonable time, not exceeding 30 days from the date of delivery of the goods to the Guarantor. However, if hard–to–find spare parts are required, this deadline may
extend the time it takes to deliver the part from the manufacturer's factory.
7. The warranty does not include the performance of maintenance and similar operations specified in the user manual, and users are obliged to do it themselves.
8. If defects occur due to natural wear and tear during use, the warranty does not cover it.
9. The warranty does not cover:
a) Mechanical damage caused by the user's fault and product defects caused by such damage.
b) Damage caused by improper use of the product.
10. The rights under the guarantee will expire in the following circumstances:
a) Remove the warranty seal from the product.
b) Remove the serial number from the product.
c) Take action to eliminate physical defects in the product outside of authorized service.
d) Use non–original parts and consumables.

FOLLOW US

@moessmart MOES.Official @moes_smart
@moes_smart @moes_smart www.moes.net

UK REP EVATOST CONSULTING LTD
Address: Suite 11, First Floor, Moy Road Business Centre, Taffs Well, Cardiff, Wales, CF15 7QR
Tel: +44–292–1680945
Email: contact@evatost.com

EC REP AMZLAB GmbH
Laubenhof 23, ESSEN 45326
Email: info@amz–lab.de
Tel: +491745298066
Made In China

Manufacturer:
WENZHOU NOVA NEW ENERGY CO.,LTD
Address: Power Science and Technology Innovation Center, NO.238, Wei 11 Road, Yueqing Economic Development Zone, Yueqing, Zhejiang, China
Tel: +86–577–57186815
After–sale Service: service@moeshouse.com

Gebrauchsanweisung
(Deutsch)

TECHNISCHE DATEN
Stromversorgung: 95 ~ 240 VAC, 50/60 Hz oder
24 V DC/AC, 50/60 Hz
Die tatsächliche Spannung entnehmen Sie bitte den auf der Rückseite des Thermostats aufgedruckten Laserinformationen.
Modell: WHT–S02
Strombelastung: 5 A (Wassererwärmung, Wasser–/Gaskessel),
16 A (Elektroheizung)
Sensor: NTC3950, 10 K
Genauigkeit: ±1 ˚C
Temperatursollbereich: 5—35 ˚C
Raumtemperaturbereich: 5—70 ˚C
Temperaturanzeigebereich: 5—70 ˚C
Umgebungstemperatur: 0—45 ˚C
Umgebungsfeuchtigkeit: 5—95 % relative Luftfeuchtigkeit (nicht kondensierend)
Lagertemperatur: –5—45 ˚C
Stromverbrauch: <1. 5 W
Zeitfehler: < 1 %
Gehäusematerial: PC + ABS (feuerfest)
Installationsbox: 86 x 86 mm quadratisch oder europäische 60 mm runde Box
Kabelanschlüsse: Kabel 2 x 1,5 mm²oder 1 x 2,5 mm²
Schutzklasse: IP20
Max. Sendeleistung: +16 dBm

CE–Konformitätserklärung
Hiermit erklärt Wenzhou NOVA New Energy CO., LTD, dass der Funkgerätetyp WHT–S02 den Richtlinien 2014/35/EU, 2014/30/EU, 2011/65/EU, 2014/53/EU vollständig entspricht Der Text der EU–Konformitätserklärung ist unter folgender Internetadresse verfügbar:
https://www.moestech.com/blogs/news/wht–s02

Gewährleistungen
Sehr geehrte Damen und Herren, vielen Dank für Ihren Kauf.
Wir hoffen, Sie genießen es.
Die Garantie für die Produkte in der Garantiekarte wird hiermit wie folgt gewährt.
Als Bedingung für die Inanspruchnahme der Garantie müssen Sie die folgenden Bedingungen und Verfahren einhalten:
1. Produkte sind von einer 24–monatigen Garantie abgedeckt, die ab dem Datum des Kaufs des abgedeckten Produkts durch einen Einzelhandelskunden gültig ist.
2. Um Garantierechte auszuüben, muss der Käufer Folgendes vorlegen: a) Garantiekarte, b) Kaufnachweis (Mehrwertsteuerrechnung, Finanzbeleg oder anderes Dokument, das das tatsächliche Kaufdatum bestätigt), es sei denn, das Kaufdatum des Produkts stammt von der Garantiekarte.
3. Wenn Produktqualitätsprobleme innerhalb von 24 Monaten nach Erhalt auftreten, bereiten Sie das Produkt und die Verpackung vor und gehen Sie zum Ort oder Geschäft, in dem Sie es gekauft haben, um eine After–Sales–Wartung zu beantragen. Wenn das Produkt aus persönlichen Gründen beschädigt wird, wird eine bestimmte Wartungsgebühr berechnet.
4. Die Garantie erstreckt sich nicht auf:
a) Mechanische Schäden durch Verschulden des Benutzers und Produktmängel durch solche Schäden.

b) Schäden, die durch unsachgemäße Verwendung des Produkts verursacht werden.

Vorsicht
Gefahr von Elektroschock oder Ausrüstungsschäden.
Kann schockierenIndividuen oder Kurzgeräte Schaltungen.
Trennen Sie die Stromversorgung vor der Installation ab.

Manual de instrucciones
(Español)

DATOS TÉCNICOS
Fuente de alimentación: 95 ~240 V CA, 50/60 Hz o 24 V CC/CA, 50/60 Hz
Verifique la información impresa con láser en la parte posterior del termostato para conocer el voltaje real.
Modelo: WHT–S02
Carga actual: 5 A (calentamiento de agua, caldera de agua y gas),
16 A (calentamiento eléctrico)
Sensor: NTC3950, 10 K
Precisión: ±1 ˚C
Rango de temperatura establecida: 5–35 ˚C
Rango de temperatura ambiente: 5–70 ˚C
Rango de temperatura en pantalla: 5 ~ 70 ˚C
Temperatura ambiente: 0 ~ 45 ˚C
Humedad ambiente: 5 ~ 95 % HR (sin condensación)
Temperatura de almacenamiento: –5 ~ 45 ˚C
Consumo de energía: <1. 5 W

Error de sincronización: < 1 %
Material de la carcasa: PC + ABS (ignífugo)
Caja de instalación: cuadrada de 86 x 86 mm o redonda europea de 60 mm
Terminales de cable: cable de 2 x 1,5 mm² o 1 x 2,5 mm²
Clase de protección: IP20
Potencia de transmisión máxima: +16 dBm

Declaración de conformidad CE
Por la presente, Wenzhou NOVA New Energy CO., LTD declara que el equipo de radio tipo WHT–S02 cumple con las Directivas 2014/35/UE, 2014/30/UE, 2011/65/UE, 2014/53/UE. El texto completo de la declaración UE de conformidad está disponible en la siguiente dirección de Internet:
https://www.moestech.com/blogs/news/wht–s02

Instrucciones de garantía
Estimado Señor o señora, gracias por comprar el producto.
Esperamos que le guste usarlo.
Se otorga la siguiente garantía a los productos en la tarjeta de garantía.
Como condición para el uso de la garantía, debe cumplir con los siguientes términos y procedimientos:
1. el producto goza de una garantía de 24 meses, que entrará en vigor a partir de la fecha en que el cliente minorista compre el producto cubierto.
2. para ejercer la garantía, el comprador debe presentar: a) la tarjeta de garantía, b) el certificado de compra (factura de iva, recibo financiero u otro documento que confirme la fecha real de compra), a menos que la fecha de compra del producto provenga de la tarjeta de garantía.
3. dentro de los 24 meses siguientes a la fecha de recepción del producto,

si hay problemas de calidad del producto, prepare el producto y el embalaje y vaya al lugar de compra o tienda para solicitar el mantenimiento post – venta. Si el producto se daña por razones personales, se cobrará una cierta tarifa de mantenimiento.
4. la garantía no incluye:
a) los daños mecánicos causados por la negligencia del usuario y los defectos resultantes del producto.
b) daños causados por el uso inadecuado del producto.

PRECAUCIÓN
Peligro de choque eléctrico o daño al equipo.
Puede impactar a individuos o circuitos de equipos cortos.
Desconecte la fuente de alimentación antes de la instalación.

Manuel d'instruction
(Français)

DONNÉES TECHNIQUES
Alimentation : 95 ~ 240 VCA, 50/60 Hz ou 24 V CC/CA, 50/60 Hz
Veuillez vérifier les informations imprimées au laser au dos du thermostat pour connaître la tension réelle.
Modèle : WHT–S02
Charge actuelle : 5 A (chauffage de l'eau, chaudière à eau/gaz),
16 A (chauffage électrique)
Capteur : NTC3950, 10 K
Précision : ± 1 ˚C
Plage de température définie : 5–35 ˚C
Plage de température ambiante : 5–70 ˚C

Plage de température d'affichage : 5 à 70 ˚C
Température ambiante : 0 à 45 ˚C
Humidité ambiante : 5 à 95 % HR (sans condensation)
Température de stockage : –5 à 45 ˚C
Consommation électrique : < 1. 5 W
Erreur de synchronisation : < 1 %
Matériau de la coque : PC + ABS (ignifuge)
Boîtier d'installation : carré 86 x 86 mm ou rond européen 60 mm
Bornes de fil : fil 2 x 1,5 mm² ou 1 x 2,5 mm²
Classe de protection : IP20
Puissance de transmission max. : +16 dBm

Déclaration de conformité CE
Par la présente, Wenzhou NOVA New Energy CO., LTD déclare que l'équipement radio de type WHT–S02 est conforme aux directives 2014/35/UE, 2014/30/UE, 2011/65/UE, 2014/53/UE. Le texte intégral de la déclaration de conformité UE est disponible à l'adresse Internet suivante :
https://www.moestech.com/blogs/news/wht–s02

Description de la garantie
Cher Monsieur ou Madame, merci d'avoir acheté ce produit.
Nous espérons que vous apprécierez de l'utiliser.
La garantie ci – dessous est accordée pour les produits figurant sur la carte de garantie.
Comme condition d'utilisation de la garantie, vous devez respecter les modalités et procédures suivantes:
1. Les produits bénéficient d'une garantie de 24 mois à compter de la date d'achat du produit couvert par le client au détail.

2. Pour exercer le droit à la garantie, l'acheteur doit présenter: a) une carte de garantie, b) une preuve d'achat (facture TVA, reçu financier ou autre document confirmant la date d'achat effective), sauf si la date d'achat du produit provient de la carte de garantie.
3. S'il y a un problème de qualité du produit dans les 24 mois suivant la date de réception du produit, veuillez préparer le produit et l'emballage et vous rendre à l'endroit ou au magasin où vous l'avez acheté pour demander une réparation après – vente. Si le produit est endommagé pour des raisons personnelles, certains frais de réparation seront facturés.
4. La garantie ne couvre pas:
a) les dommages mécaniques causés par la faute de l'utilisateur et les défauts du produit qui en résultent.
b) les dommages causés par une mauvaise utilisation du produit.

ATTENTION
Risque de choc électrique ou d'endommagement de l'équipement.
Peut choquer les individus ou les circuits d'équipement court.
Déconnectez l'alimentation avant l'installation.

Manuale di istruzioni
(Italiano)

DATI TECNICI
PAlimentazione: 95 ~240 V CA, 50/60 Hz o 24 V CC/CA, 50/60 Hz
Per conoscere la tensione effettiva, controllare le informazioni stampate al laser sul retro del termostato.
Modello: WHT–S02
Carico di corrente: 5 A (riscaldamento dell'acqua, caldaia a gas/acqua),
16 A (riscaldamento elettrico)

Sensore: NTC3950, 10 K
Precisione: ±1 ˚C
Intervallo di temperatura impostata: 5–35 ˚C
Intervallo di temperatura ambiente: 5–70 ˚C
Intervallo di temperatura del display: 5 ~ 70 ˚C
Temperatura ambiente: 0~ 45 ˚C
Umidità ambiente: 5 ~ 95 % RH (senza condensa)
Temperatura di stoccaggio: –5~ 45 ˚C
Consumo energetico: <1. 5W
Errore di temporizzazione: < 1%
Materiale della calotta: PC + ABS (ignifugo)
Scatola di installazione: 86 * 86mm quadrata o scatola rotonda europea da 60mm
Terminali dei cavi: filo 2 x 1,5 mm² o 1 x 2,5 mm²
Classe di protezione: IP20
Potenza di trasmissione massima: +16dBm

Dichiarazione di conformità CE
Con la presente, Wenzhou NOVA New Energy CO., LTD dichiara che l'apparecchiatura radio tipo WHT–S02 è conforme alle direttive 2014/35/UE, 2014/30/UE, 2011/65/UE, 2014/53/UE. Il testo completo della dichiarazione di conformità UE è disponibile al seguente indirizzo Internet:
https://www.moestech.com/blogs/news/wht–s02

Istruzioni di garanzia
Gentile Signore o Signora, grazie per l'acquisto del prodotto.
Speriamo che vi piacerà usarlo.

La garanzia per i prodotti riportati nella scheda di garanzia è concessa come segue.
Come condizione per l'utilizzo della garanzia, è necessario rispettare i seguenti termini e procedure:
1. I prodotti sono coperti da una garanzia di 24 mesi, a decorrere dalla data di acquisto del prodotto coperto da parte di un cliente al dettaglio.
2. Per esercitare i diritti di garanzia, l'acquirente deve presentare: a) Carta di garanzia, b) Prova di acquisto (fattura IVA, ricevuta finanziaria o altro documento attestante la data effettiva di acquisto), a meno che la data di acquisto del prodotto non provenga dalla carta di garanzia.
3. Se si verificano problemi di qualità del prodotto entro 24 mesi dalla data di ricevimento, si prega di preparare il prodotto e l'imballaggio e recarsi nel luogo o negozio in cui è stato acquistato per richiedere la manutenzione post–vendita. Se il prodotto è danneggiato per motivi personali, verrà addebitato un certo costo di manutenzione.
4. La garanzia non copre:
a) Danni meccanici causati da errori dell'utente e difetti del prodotto causati da tali danni.
b) Danni causati da uso improprio del prodotto.

ATTENZIONE
Pericolo di urto elettrico o danni all'attrezzatura.
Può shockindividuals o circuiti di attrezzature corte.
Scollegare l'alimentatore prima dell'installazione.

Manual de instruções
(Português)

DADOS TÉCNICOS
Fonte de alimentação: 95 ~240 VAC, 50/60Hz ou 24V DC/AC, 50/60Hz

Verifique as informações impressas a laser na parte traseira do termostato para saber a voltagem real.
Modelo: WHT–S02
Carga atual: 5A (aquecimento de água, caldeira de gás de água),
16A (aquecimento elétrico)
Sensor: NTC3950, 10K
Precisão: ±1˚C
Faixa de temperatura definida: 5–35˚C
Faixa de temperatura ambiente: 5–70˚C
Faixa de temperatura de exibição: 5 ~ 70˚C
Temperatura ambiente: 0~ 45˚C
Umidade ambiente: 5 ~ 95% UR (sem condensação)
Temperatura de armazenamento: –5~ 45˚C
Consumo de energia: <1. 5W
Erro de tempo: < 1%
Material do invólucro: PC +ABS (à prova de fogo)
Caixa de instalação: 86 * 86 mm quadrado ou caixa redonda europeia de 60 mm
Terminais de fio: Fio 2 x 1,5 mm² ou 1 x 2,5 mm²
Classe de proteção: IP20
Potência máxima de transmissão: +16dBm

Declaração de conformidade CE
Por meio deste, a Wenzhou NOVA New Energy CO., LTD declara que o tipo de equipamento de rádio WHT–S02 está em conformidade com a Diretiva 2014/35/UE, 2014/30/UE, 2011/65/UE, 2014/53/UE. O texto

completo da declaração de conformidade da UE está disponível no seguinte endereço de internet:
https://www.moestech.com/blogs/news/wht–s02

Instruções de garantia
Caro senhor ou senhora, obrigado por comprar o produto.
Esperamos que você goste de usá–lo.
A garantia para os produtos no cartão de garantia é concedida da seguinte forma.
Como condição para usar a garantia, você deve cumprir os seguintes termos e procedimentos:
1. Os produtos são cobertos por uma garantia de 24 meses, efetiva a partir da data de compra do produto coberto por um cliente varejista.
2. Para exercer os direitos de garantia, o comprador deve apresentar: a) cartão de garantia, b) comprovante de compra (fatura IVA, recibo financeiro ou outro documento confirmando a data real da compra), a menos que a data de compra do produto venha do cartão de garantia.
3. se problemas de qualidade do produto ocorrerem dentro de 24 meses a partir da data de recebimento, por favor prepare o produto e embalagem e vá para o lugar ou loja onde você comprou para aplicar para manutenção pós–venda. Se o produto for danificado devido a razões pessoais, uma certa taxa de manutenção será cobrada.
4. A garantia não cobre:
a) Danos mecânicos causados pela falha do usuário e defeitos do produto causados por tais danos.
b) Danos causados pelo uso indevido do produto.

Atenção
Perigo de choque elétrico ou dano ao equipamento.
Pode chocar indivíduos ou circuitos de equipamento curto.
Desconecte a fonte de alimentação antes da instalação.

Instrukcja obsługi
(Polski)

DANE TECHNICZNE
Zasilanie: 95 ~240 VAC, 50/60Hz or 24V DC/AC,50/60Hz
Proszę sprawdzić informacje laserowe wydrukowane z tyłu termostatu pod kątem rzeczywistego napięcia.
Wzór：WHT–S02
Obciążenie bieżące: 5A (podgrzewanie wody, kotł wodny),
16A (ogrzewanie elektryczne)
Czujnik: NTC3950, 10K
Dokładność: ±1˚C
Ustaw zakres temperatury: 5–35˚C
Zasięg temperatury pokoju: 5–70˚C
Zakres temperatury wyświetlania: 5 ~ 70˚C
Temp otoczenia.: 0~ 45˚C
Wilgotność otoczenia: 5 ~ 95 % RH (Nieskraplające)
Temp magazynowania.: –5~ 45˚C
Zużycie energii: <1. 5W
Błąd czasu: < 1%
Materiał powłoki: PC +ABS（ognioodporność）
Pudełko instalacyjne: 86 * 86mm Kwadratowe lub europejskie okrągłe pudełko 60mm
Zaciski przewodowe: Drut 2 x 1.5 mm² or 1 x 2.5 mm²
Klasa ochrony: IP20
Maksymalna moc transmisji: +16dBm

Deklaracja zgodności CE
Niniejszym Wenzhou NOVA New Energy CO., LTD oświadcza, że sprzęt radiowy typu WHT–S02 jest zgodny z dyrektywą 2014/35/UE, 2014/30/UE, 2011/65/UE, 2014/53/UE, Pełny tekst deklaracji zgodności UE jest dostępny pod następującym adresem internetowym:
https://www.moestech.com/blogs/news/wht–s02

INSTRUKCJE GWARANCJI
Szanowny Panie lub Pani, dziękujemy za zakup produktu.
Mamy nadzieję, że spodoba ci się korzystanie z niego.
Gwarancja na produkty zawarte w karcie gwarancyjnej jest niniejszym udzielana w następujący sposób.
Warunkiem korzystania z gwarancji jest przestrzeganie następujących warunków i procedur:
1. Produkty objęte są 24–miesięczną gwarancją, obowiązującą od dnia zakupu objętego produktem przez klienta detalicznego.
2. Aby skorzystać z praw gwarancyjnych, kupujący musi okazać: a) kartę gwarancyjną, b) dowód zakupu (faktura VAT, paragon finansowy lub inny dokument potwierdzający faktyczną datę zakupu), chyba że data zakupu produktu pochodzi z karty gwarancyjnej.
3. Jeśli problemy z jakością produktu wystąpią w ciągu 24–miesięcy od daty otrzymania produktu, należy przygotować produkt i opakowanie i udać się do miejsca lub sklepu, w którym go zakupiłeś, aby złożyć wniosek o konserwację posprzedażną. Jeśli produkt zostanie uszkodzony z przyczyn osobistych, zostanie naliczona pewna opłata konserwacyjna.
4. Gwarancja nie obejmuje:
a) Uszkodzenia mechaniczne spowodowane winą użytkownika oraz wady produktu spowodowane takimi uszkodzeniami.
b) Uszkodzenia spowodowane niewłaściwym użytkowaniem produktu.

Ostrożenie
Zagrożenie uderzeniem elektrycznym lub uszkodzeniem sprzętu.
Może szokować jednostki lub obwody krótkiego sprzętu.
Odłącz zasilanie przed instalacją.

Руководство по эксплуатации
(Русский язык)

ТЕХНИЧЕСКИЕ ДАННЫЕ
Источник питания:95 ~240 VAC, 50/60Hz or 24V DC/AC,50/60Hz
Пожалуйста, проверьте информацию, напечатанную лазером на задней стороне термостата, чтобы узнать фактическое напряжение.
Модель：WHT–S02
Текущая нагрузка: 5A (водонагреватель, водогазовый котел),
16A (электрическое отопление)
Датчик: NTC3950, 10K
Точность: ±1˚C
Диапазон заданной температуры: 5–35˚C
Диапазон комнатной температуры: 5–70˚C
Диапазон отображаемых температур: 5 ~ 70˚C
Температура окружающей среды.: 0~ 45˚C
Влажность окружающего воздуха: 5 ~ 95 % RH
(Неконденсирующийся)
Температура хранения.: –5~ 45˚C
Потребляемая мощность: <1. 5W
Ошибка синхронизации: < 1%
Материал корпуса: PC +ABS（Огнестойкий)
Монтажная коробка: квадратная 86 * 86 мм или круглая европейская

60 мм коробка
Клеммы проводов: Провод 2 x 1,5 MM² или 1 x 2,5 MM²
Класс защиты: IP20
Максимальная мощность передачи: +16dBm

Декларация соответствия CE
Настоящим компания Wenzhou NOVA New Energy CO., LTD заявляет, что радиооборудование типа WHT–S02 соответствует Директивам 2014/35/EU, 2014/30/EU, 2011/65/EU, 2014/53/EU.
Полный текст декларации о соответствии ЕС доступен по следующему интернет–адресу:
https://www.moestech.com/blogs/news/wht–s02

Гарантия
Уважаемый господин или госпожа, спасибо за покупку этого продукта.
Надеемся, вам понравится его использовать.
На продукты, указанные в гарантийной карте, предоставляется следующая гарантия.
В качестве условия использования гарантии вы должны соблюдать следующие условия и процедуры:
Гарантийный срок на продукцию составляет 24 месяца и вступает в силу с даты покупки товара розничным клиентом.
2. Для осуществления гарантийного права покупатель должен предъявить: а) гарантийную карту, b) свидетельство о покупке (счет – фактуру НДС, финансовую квитанцию или другой документ, подтверждающий фактическую дату покупки), если только дата покупки продукта не получена из гарантийной карты.
3. В случае возникновения проблем с качеством продукции в течение 24 месяцев с момента ее получения подготовьте продукт и упаковку и отправьтесь в место покупки или магазин для послепродажного ремонта. Если продукт поврежден по личным причинам, взимается определенная плата за ремонт.

4. Гарантия не включает:
а) механическое повреждение по вине пользователя и вызванные этим дефекты продукции.
b) Ущерб, причиненный неправильным использованием продукта.

ПРОСТРЕЖЕНИЕ
Электрический удар или опасность повреждения оборудования.
Может шокировать индивидуальные или короткие схемы оборудования.
Отключите источник питания перед установкой.

MOES® 温州早晨电子有限公司	名称	WHT-S02			材质	80g 双胶纸		修改	修改	日期	内容	技术审核	内容审核
	尺寸	85*85mm	折页方式			名字	日期		章译以	25/12/03	修改英代邮箱	董逸豪	郑丰
					初版设计	设计人							
	语言	英+德西法意葡俄波			技术审核	审核人							
					翻译校对	批准人							
					内容审核	批准人							